COSMI
Tomorrow's Reality...Today
431 N. Figueroa St., Wilmington, CA 90744
(310) 835-9687

© COSMI Corp., 1989 IBM 198

290360

IBM® PC™/ TANDY®
and Compatibles
IBM-198

Operations Manual

WAR EAGLES

Authentic WORLD WAR I Aerial Combat Simulator

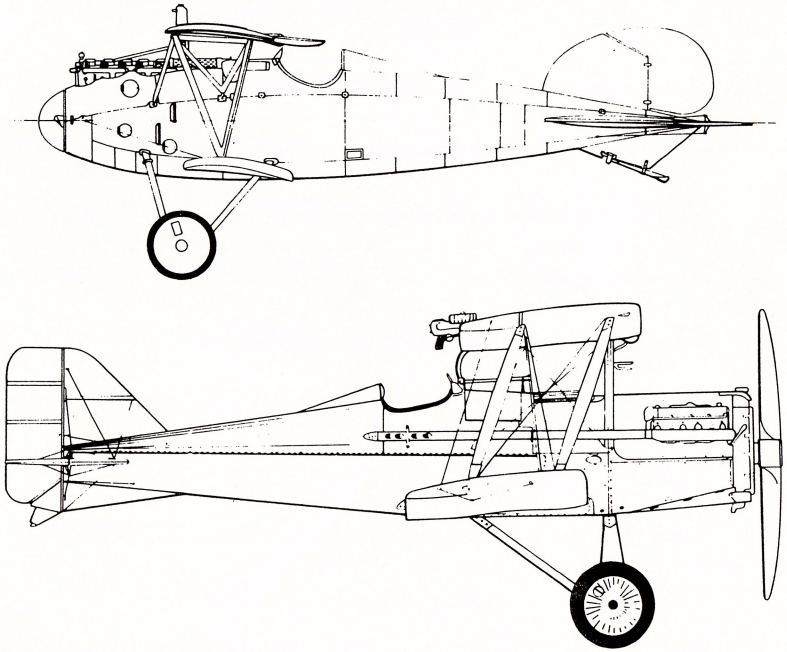

COSMI
Tomorrow's Reality...Today

IBM• PC™ and TANDY• are registered trademarks of International Business Machines Corp. and Tandy Corp.

WAR EAGLES

CREATED & PROGRAMMED
BY
RON PALUDAN

TABLE OF CONTENTS

INTRODUCTION 4
LOADING INSTRUCTIONS 6
HARD DISK INSTALLATION 6
MAIN MENU CONTROLS 6
MAIN MENU OPTIONS 6
FLYING THE PLANE 7
FLIGHT INSTRUMENTS 7
AIRCRAFT CONTROLS 8
KEYBOARD CONTROL SUMMARY 8
CRASHING 8
RETREATING 9
MISSIONS 9
THE RED BARON 11
BALLOON BUSTING 13

INTRODUCTION

Capturing the imagination of the world, the glamorous winged warriors of World War I became the heroes of a generation as the noble knights of the sky. Theirs was the pristine combat of those who met in the cold, clear air in battles where their own skill was the vital factor in deciding their fate.

Strapped in twenty-foot-long 2000 lb. wood and fabric airframes, powered by thundering Hispano-Suizas, Clergets, Le Rhones, Mercedes and Oberursels, these "Lone Eagles" dared the conquest of the air in mortal combat with opponents. They flew at the "outrageous" speed of over 100 mph. Armed with Vickers, Lewis, Spandau and Maxim machine guns, these intrepid aviators maintained a degree of chivalry unique in modern warfare. Although combat was fierce, and quite often deadly, the romance and thrill of conquering a new element engendered an admiration for their comrades and a healthy respect for, and interest in, their opponents.

When Boelcke, the great German ace, was killed in a collision, British planes flew over to Cambrai, where he was stationed, and dropped wreaths with notes attached, which read:

"To the memory of Captain Boelcke, our brave and chivalrous foe, from the British Flying Corps."

Young patriots of many nationalities enlisted in order to prove their valor in the air. Americans joined the Lafayette Escadrille, where they flew the 120 mph French-designed single-seat fighter, the Spad VII. Englishmen preferred the Sopwith Camel F1, a British fighter armed with twin Vickers machine guns and credited with destroying more enemy aircraft than any other in the First World War. The French and Belgians

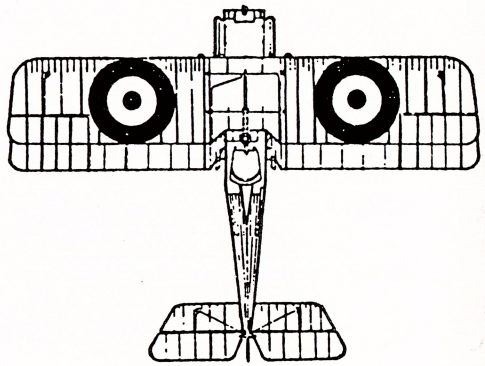

SE 5A
Single-seater scout (1917-18). This was an improvement over the SE 5, both being products of the Royal Aircraft Factory at Farnborough, RFC aces Bishop, Mannoch and McCudden scored most of their victories on this type aircraft.

flew the trim little Nieuports (1233 lbs. loaded), while the Germans countered with the Albatross and a variety of Fokkers.

Great skill and daring were a prerequisite for a successful fighter pilot. Equipped with a minimum of instrumentation, machine guns which often jammed, fuel lines that clogged at high altitude, and fragile crafts of wood and fabric, these intrepid warriors would clash, the outcome often determined by wits and cunning alone. This was not modern, high-tech "push button" warfare, with heat-seeking missiles. To the contrary, this was "up close and personal" combat. Instincts often prevailed over tactics.

One such "close encounter" was reported by Major Maclaren D.S.O., M.C., D.F.C., a Canadian ace who was credited with 48 enemy aircraft destroyed. This is his story:

"One day, while flying over the German lines, I engaged an enemy two-seater. After considerable maneuvering I got within close range of the enemy machine, and in such a position that I could not be fired upon by the enemy observer. Taking aim, I pressed the triggers, but to my annoyance, my guns refused to work.

Pulling out of the fight for a few minutes, I thought I had readjusted the guns. After some more maneuvering, I placed myself in the same position as before. Again, I pressed the triggers, but no shot came from my weapons.

Feeling my ammunition chutes, I discovered that both belts were broken. By this time, I had lost my perfect position of being in my enemy's blind spot, but, to my astonishment, I saw that the German was not firing at me. I flew closer, and almost alongside. I saw that the observer was standing with his machine gun pointing into the air, away from him.

Suddenly the observer waved to me, and moved his gun up and down, signalling that he had no more ammunition. I then flew in as close to him as I possibly could without colliding, and waved back at him. The German pilot and the observer both returned the greeting, and we parted none the worse for the encounter."

However, many young fliers never made it home. The average life expectancy for a new airman on the Western Front was about three to six weeks. Almost half of the 180 Americans who volunteered to fly for France before the U.S. entered the war, either died or were captured.

Seventy-seven percent of the French combat pilots were lost during the war, and the first British pilots to go to France were told that only one man in twenty could expect to see England again.

Skill, daring, romance, excitement, glamour, chivalry, action, glory and ... death. The things of which legends are made.

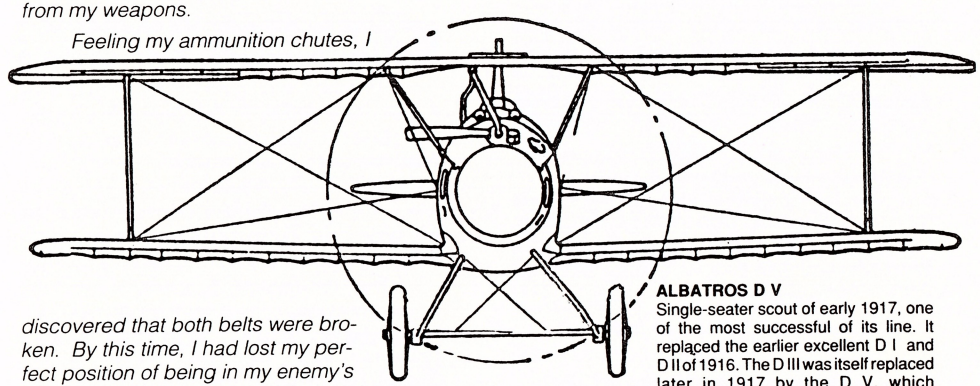

ALBATROS D V
Single-seater scout of early 1917, one of the most successful of its line. It replaced the earlier excellent D I and D II of 1916. The D III was itself replaced later in 1917 by the D V, which resembled it closely in physical appearance.

• PLAYER'S NOTE

Now, you can match your skill and daring against the flying legends of World War I. Have a go with The Red Baron in his Fokker Triplane, or the White Knight in his Sopwith Camel. Match your technique against Frank Luke in "balloon busting" or just mix it up in an aerial dogfight. Just remember, there's no radar or laser-guided weapons systems here ...you succeed or fail based upon one thing only ... how good you are !

LOADING INSTRUCTIONS

1. Insert your DOS disk in drive A, close door and turn the computer on. After DOS is loaded, remove DOS disk.

2. Insert WAR EAGLES disk in drive A with label facing up. Close the drive door.

3. At the A> prompt type: WE and press the ENTER key.

4. You will be asked if you have a joystick. Answer "Y" for yes or "N" for no.

5. Select the graphics mode that your computer uses.

6. After displaying a title screen, the main menu will appear.

HARD DISK INSTALLATION

To simplify installation of WAR EAGLES on a hard disk drive, an installation program has been provided. If you would like to copy WAR EAGLES onto your hard disk, follow these steps:

1. Place your WAR EAGLES disk in drive A and type:

A:

and press the ENTER key

2. Type:

INSTALL

and press the ENTER key

If the letter for your hard disk is something other than C, enter INSTALL followed by a space and the letter for your hard disk. (For example, if your hard disk is drive D type: INSTALL D:

3. The install program will create a directory labelled "WAREGL" and copy all necessary files into that directory.

MAIN MENU CONTROLS

To change options on any of the WAR EAGLES menu screens you may use either the computer's cursor keys or a joystick (if one is installed). An option is selected by pressing either the space bar or ENTER key or by pressing the joystick's button.

You can exit to DOS at any time by pressing the ESC key. You will be asked if you are sure. Answer "Y" for yes or "N" for no.

MAIN MENU OPTIONS

• ENLIST NEW PILOT

Before flying any missions, you will need to enter a pilot's nationality and name. To do this, position the check mark in the box to the right of "ENLIST NEW PILOT" and press the ENTER key (or space bar or joystick button).

The pilot's nationality is selected first. Use the left and right cursor keys or joystick to select a British or German pilot. Press the ENTER key when the check mark is in the desired box.

Next, enter the pilot's name. The name may be up to 16 letters in length (including spaces). After entering the name, the program returns to the MAIN MENU.

The newly enlisted pilot will be listed below the menu. The name of the currently active pilot will always appear in this box.

• SELECT PILOT

Up to eight pilots can be kept on the roster at a time. If you want to fly under a different pilot's name or delete a pilot from the roster, select this option.

A list of pilots and their nationality will appear. Again, use the up/down cursor keys or joystick to move the check mark next to the pilot that you want to fly missions and press the ENTER key. That pilot's name will now appear on the MAIN MENU.

To delete a pilot's name from the roster, position the check mark to the right of his name and press the DEL key.

• FLY MISSION

When you are ready to select a mission, select this option. The MAIN MENU will be replaced with the OPTIONS menu.

The difficulty level of the mission can be adjusted by holding down either the left or right cursor keys or by moving the joystick left or right. The gauge indicates the current level of difficulty. The higher the level of difficulty, the more skilled enemy pilots will be in the upcoming mission. The difficulty level will also affect your score at the end of the mission. Pilots who select difficult missions will receive higher points.

By pressing the down cursor key, you can change the number of clouds that will appear in the combat area.

WARNING!!! CLOUDS WILL SLOW THE GAME DOWN SIGNIFICANTLY!

Unless the computer you are using has a very high processing speed (i.e. an 80286 or 80386 based computer), it is strongly recommended that the cloud cover be set to NONE.

When the difficulty and cloud cover levels are set at the desired levels, press the ENTER key.

The MISSIONS menu will appear next. Select a mission by positioning the check mark next to a mission title and press the ENTER key.

Detailed descriptions of the missions will be given in the MISSIONS section later in this manual

• VIEW PILOT RECORD

This option will display the current pilot's uniform, showing any medals or decorations that pilot has received. It will also provide the number of enemy planes that the pilot has shot down and his game score.

• VIEW HIGH SCORES

The top six scoring pilots are listed. This list will include pilots that are no longer on the current roster.

Scoring is based on the success and difficulty of a pilot's missions as well as the number of enemy planes shot down. A pilot can also lose points for allied planes lost on a mission or for accidently hitting a friendly plane.

As inspiration for ambitious pilots, scores for Canada's Lieutenant Colonel William A. Bishop and Germany's Rittmeister Manfred von Richthofen are included.

FLYING THE PLANE

• FLIGHT INSTRUMENTS

By today's standards the instrumentation on a World War One era aircraft were quite primitive. Here is a description of each of the instruments and their layout on the instrument panel:

• Top Row, Left to Right:

1. Fuel gauge - indicates amount of fuel in tanks.

2. Tachometer - Engine speed in thousands of revolutions per minute.

3. Compass - Shows the current heading of your aircraft.

• Bottom Row, Left to Right:

4. Altimeter - Dial gives your altitude in feet. The short red needle is thousands of feet, the longer white needle is hundreds of feet. EXAMPLE: if the long white needle is on "5" and the short red needle is between "3" and "4", then your altitude is approximately 3500 feet.

5. Airspeed Indicator - Dial shows your speed in tens of miles per hour. EXAMPLE: if the needle points to 12, then your air speed is 120 MPH.

6. Clipboard to Left of instrument panel: Kill tally - records total number of planes current pilot has shot down.

• AIRCRAFT CONTROLS

1. THE JOYSTICK

If you do not have a joystick, you can use the cursor keys on the keyboard instead. You will find however, that a joystick gives you better control of the airplane and a more "realistic" feel. Pushing the stick away from you pushes the nose of the aircraft down. Pulling the stick towards you will move the nose of the airplane up. Moving the stick to the right banks the airplane to the right. Moving the stick to the left banks the airplane to the left.

2. MACHINE GUNS

To fire machine guns, press joystick button or space bar or ENTER key on keyboard. At the start of a mission, you have 250 rounds of ammunition in each gun.

3. ENGINE

Engine speed can be increased by pressing the "+" key and decreased by pressing the "-" key.

4. PAUSING THE GAME

The game can be frozen by pressing the "P" key. To resume the game, press any key.

5. COCKPIT VIEWS

When the mission starts, you will be looking forward. You can also use the following keys to look left, right or behind your plane. To use the number keys on the numeric keypad, you will need to press the NUM LOCK key.

"W" or "8" = Look Forward

"A" or "4" = Look Left

"D" or "6" = Look Right

"X" or "2" = Look Back

6. CHASE PLANE VIEWS

You can also see your own plane from an invisible (Stealth???) chase plane by pressing the F2 (close), F3 (medium), or F4 (far) keys. To return to the cockpit view, press the F1 key.

7. QUITTING A MISSION

If you decide to quit a mission prior to its conclusion, press the F10 key. You will be asked if you are sure. Answer by pressing either "Y" for yes or "N" for no. If you quit in this manner, the pilot will not receive any points or credit for any enemy planes shot down during this mission.

• KEYBOARD CONTROL SUMMARY

• KEY

↑ ..... Pitch Forward

↓ ..... Pitch Backward

→ ..... Bank Right

← ..... Bank Left

+. ..... Increase Engine RPM

-..... ..... Decrease Engine RPM

ENTER or

SPACE ..... Fire Machine Guns

P .... Pause Game

8 .... Look Forward

4 .... Look Left

6 .... Look Right

2 .... Look Back

F1 .... Return to cockpit view

F2 .... Close Chase plane view

F3 .... Medium Chase plane view

F2 .... Far Chase plane view

F10 .... Quit mission

ESC .... Exit to DOS

• CRASHING

1. "BUYING THE FARM"

Generally, airplane pilots did not have parachutes during World War I. (Some German pilots were equipped with parachutes late in the war, although even then they were considered unreliable.) If you do not survive a crash, the pilot's name is removed from the active pilot roster.

2. LOSS OF CONTROL

If your plane sustains too much damage, you will begin to lose control and may crash. Your only chance for survival is to try to minimize the angle and velocity of your plane's impact.

3. CAPTURE

If you survive a crash, there is still a chance that you may be captured by the enemy. For a British pilot, the farther east he is, the greater the likelihood of capture. For a German pilot, capture is more likely in the west. For this reason, it is best to get as far from enemy lines as possible when your plane is in trouble. A captured pilot will be removed from the pilot roster.

4. COLLISIONS

Running into or being rammed by another airplane, balloon, or the fireball of an exploding aircraft is almost always fatal.

• RETREATING

If the situation seems dangerously unfavorable during a mission, you can retreat by flying back towards your own base. This is east for German pilots and west for British pilots. The mission will end when you are far enough from enemy lines. This is NOT the same as quitting a mission by pressing the F10 key which is instantaneous. After retreating, a pilot still gets credit for any enemy planes shot down during that mission.

MISSIONS

• BRITISH MISSIONS

1. On Patrol

You are on a routine patrol over No-Man's land scouting for enemy planes. You're alone, so watch those blind spots!

2. Escort Observation Plane

In preparation for a major offensive, an unarmed observation plane is being sent to photograph enemy positions. You must protect him from enemy fighters.

3. Balloon Busting

Our troops are getting pounded by enemy artillery which is being directed by three well protected German observation balloons. After destroying the nearest one, proceed north and find the remaining two. The balloons are protected by enemy fighters and anti-aircraft fire (which British pilots referred to as "Archie"). As you descend in altitude, anti-aircraft fire will increase in intensity.

4. The Hornet's Nest

Just surviving this one is a victory. But if you can take out this swarm of Fokkers, they'll be talking about you all over the Western Front.

5. Single Combat

It's just you and him, and he's very good.

• GERMAN MISSIONS

1. On Patrol

Clear your sector of any enemy fighters.

2. Attack Observer

Enemy observation planes are threatening to reveal plans for our upcoming offensive. The observation planes are unarmed, but watch out for an escort.

3. "Green" Wingman

The life expectancy of a new pilot on The Western Front was about three weeks. You are escorting an over-eager recruit on a training mission. As his "guardian angel," your job is to keep him alive or at least not let him get you killed.

4. Balloon Defense

It only takes a few rounds of incendiary

bullets to turn these sitting targets into a blazing inferno. You must keep enemy fighters a safe distance away from one of our observation balloons.

5. Single Combat

A British Ace has challenged you to a personal duel in the skies.

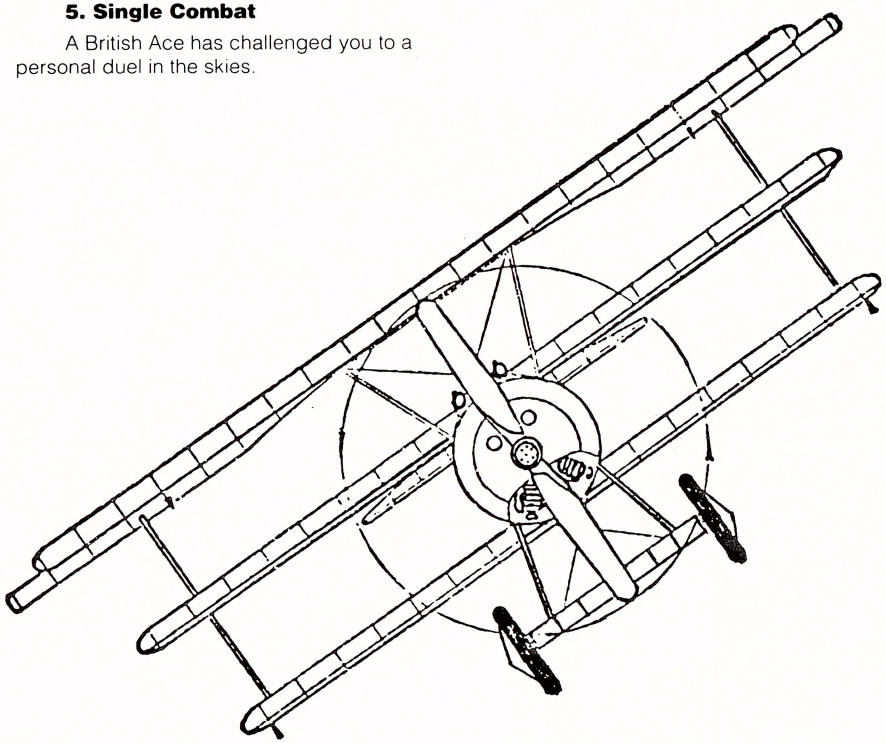

FOKKER DR I TRIPLANE
Single-seater scout, arrived on the Western Front in August 1917. It was the all-red aircraft flown by Von Richthofen in his last fight against Roy Brown's flight of Sopwith Camels.

THE RED BARON

An early-morning mist covered much of the battlefield as a pale, springtime sun rose in the eastern sky.

A single Allied RE8 two- seater reconnaissance aircraft slowly circled the German positions below, waiting for the fog to lift in order to begin its photography mission.

The Red Baron

Bursting from the clouds, the sun at its back, machine guns blazing, a bright red Fokker DR I Triplane took aim at point-blank range on the lumbering reconnaissance plane. With deadly accuracy, before either of the flexible Lewis guns in the RE8's rear cockpit could be brought to bear, the Fokker's twin Spandau guns laced the Allied plane's wood and fabric fuselage. Coughing oil and black smoke, the stricken aircraft began its plummeting death spiral.

Rittmeister Manfred Freiherr von Richthofen, the Red Baron, had added another "kill" to his list of conquests in the sky. 80 victories would be credited to him, the most in World War I, before his career ended.

Coming from a family of lesser nobility, his title of Baron actually bestowed upon him by his British adversaries, and not his "Fatherland", von Richthofen had been a cavalryman in an Uhlan regiment early in the war. Transferring to the air service, his first assignment was as an observer, until he was successful in his request for pilot training. His impressive flying skills became apparent quickly, when, in the battle of Verdun, he downed a superior Nieuport single-seat fighter with his clumsy two-seater observation bomber.

Attracting the attention of Oswald Boelcke, whose squadron was the elite of the Imperial German Flying Service, von Richthofen was transferred to a fighter squadron. Under the tutelage of Boelcke, he scored his first confirmed victory while flying an Albatross DII on September 17, 1916.

The aircraft in which von Richthofen was to become a legend was designed by Reinhold Platz, Fokker's chief aeronautical engineer. The plane arrived on the Western Front in August of 1917. Christened the Fokker DR I Triplane, and powered by a 110 hp Oberursel rotary engine, it could fly at a speed of 122 mph and had an altitude ceiling of 20,000 ft. Although somewhat slower than its Allied counterparts, the Fokker Triplane compensated with its great agility and unusually rapid rate of climb. With a total length of only 19 ft. and a wingspan of under 24 ft., the craft was not only maneuverable, but, for the pilots, also quite intimate and personal. Flying "by the seat of your pants" was more than just a colorful expression. It became a life-or-death determining instinct for survival.

Possibly the best testament to von Richthofen's flying skills was told by Lt. Col. William A. Bishop, the Allies' greatest ace of the war. Known as the White Knight of

Canada, Bishop was credited with an official record of seventy-two enemy planes destroyed, and he received Britain's highest decoration-- the Victoria Cross. This is Bishop's story:

"Richthofen was, at his best at this time. One afternoon, flying with my Squadron Commander, Major Scott, I sighted four German fighting machines. I led him in to attack them, arriving at approximately the same height at which they were flying.

The next few minutes were almost the most hectic of my life, and gave me the biggest surprise I ever got. Three of the Germans cleared off to one side and the leader (Richthofen) took on the two of us. We, at that time, had both shot down a number of Germans. I think my score was around twenty and Major Scott's about twelve, and we were beginning to feel that we knew more about the game than anybody else. Therein lies the humor of this fight.

Richthofen promptly gave us the rudest shock we could possibly have had. His three friends stood off to one side in case one of us tried to get away. He, at the beginning of the fight, got almost on my tail (which is the ideal place to be). The only way I could avoid being shot down was to turn immediately across him, giving him the most difficult shot in air fighting. As I was flying directly across at right angles to him at roughly 100 miles an hour,

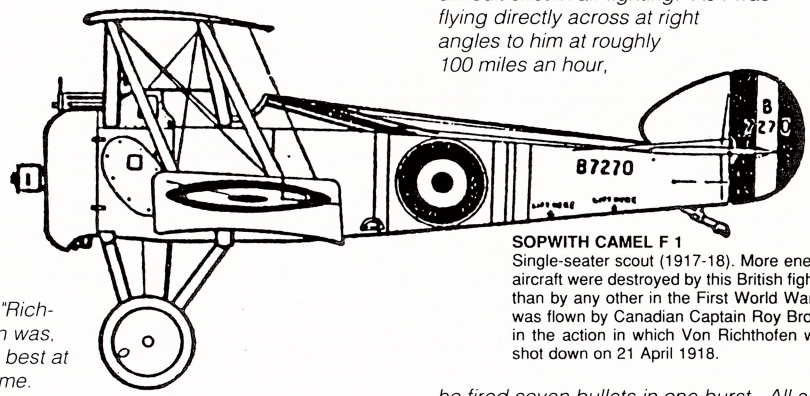

SOPWITH CAMEL F 1
Single-seater scout (1917-18). More enemy aircraft were destroyed by this British fighter than by any other in the First World War. It was flown by Canadian Captain Roy Brown in the action in which Von Richthofen was shot down on 21 April 1918.

he fired seven bullets in one burst. All seven shots ripped through the back of my seat and through the folds of my flying coat. It was the most beautiful shooting I had ever seen.

This didn't make me feel any too happy, and worse still, a few seconds later, he had me in a position where the only thing I could do was to give him the same shot again. I suppose he had seen his tracer bullets going a matter of a few inches too far back. This time he allowed for more deflection. Another burst of his bullets came right through, cutting my instrument board and instruments to pieces!"

On the morning of April 21, 1918, the Red Baron, leading a patrol of five other planes, lifted off from the German airfield in his Fokker Triplane, prepared for another day of combat. Across the battle lines, Canadian Captain A. Roy Brown, still suffering from stomach problems, took off in command of his flight of Sopwith Camels. Before the mission, he warned novice pilot Lt. Wilfred R. May, of his group, not to do anything rash, as he had yet to see any action. Soon they spotted two Allied RE8 two-seaters under attack by a flight of Fokker Triplanes. Almost at once, May's guns jammed and he turned for home. Looking about, Brown saw May desperately zigzagging across the Somme Valley, closely followed by an all red Triplane.

Brown dove to the rescue of his helpless comrade and, at an altitude of 100 ft., fired a burst straight into the Triplane. It looked to Brown as if the pilot had slumped in the cockpit, but the three plane chase continued. Australian troops on the ground opened up with everything they had at the enemy aircraft.

May, certain he was doomed, glanced back just in time to see his pursuer half spin and crash. Allied soldiers rushed to the little red Triplane and found, killed by a single bullet of unknown origin, Manfred von Richthofen, the Red Knight of Germany... dead at the stick.

Von Richthofen was buried by his adversaries with full military honors. On his grave was laid a wreath from Allied pilots inscribed, "To our gallant and worthy foe."

BALLOON BUSTING

Damp, gray skies leadened the early-morning dawn of September 18, 1918. Visibility was poor. But still, the German soldiers, in their tethered observation ballons, squinted attentively through their binoculars, keeping watch on the opposite front lines below. The job they were doing was an extremely important one in acquiring military intelligence for the slogging, stalemated trench warfare that had developed in World War I.

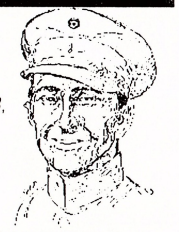

The Belgian Balloon Buster

Their first realization that something was seriously wrong was when they heard the roar of the Spad's 150 hp Hispano-Suiza engine and the crackle of its Vickers machine gun. Their view of the sound's source was obscured by the balloon, and the anti-aircraft guns on the ground were silent. Crews on the ground could be seen rushing to the winches to begin lowering the balloon to earth. Incendiary bullets flashed by the gondola as the two-man crew prepared to parachute to safety. Suddenly, the giant gas-filled behemoth erupted into flames. A giant rumble was cascading onto the men below, as they scurried to escape the collapsing inferno falling from the sky.

American pilot, Lt. Frank Luke, Jr., had just scored another victory in his own private war of "balloon-busting!"

To the unwary, these observation balloons were fat, tempting targets. Unmaneuverable and unarmed as they bobbed on their thick mooring cables, they appeared as easy "marks" for the swift fighters. However, most pilots wisely left them alone. Closer examination revealed that they were heavily protected by anti-aircraft guns and patrolling planes overhead. It was simply too hazardous to undertake an attack lightly.

However, a few pilots such as American Frank Luke, Belgian Willy Coppens, and Frenchman Michel Coiffard, developed techniques to improve the odds for success. Between them, they "bagged" 71 balloons during the war. They determined that the least dangerous way to attack was a steep

dive from above. The pilot passed swiftly through the screen of covering enemy fighters, yet, was shielded from ground fire by the bulk of the balloon. The high-speed dive also provided for a high-speed exit, which was essential.

The peppery little Coppens, who became his country's ace-of-aces, flew a Nieuport at first, but most of his victories were gained in the Hanriot HDI. Coiffard, the nimble French Air Service Officer, boasted twenty-eight "drachens" of his thirty-four victories.

But, possibly, the most flamboyant of them all was Luke. He was an unruly, undisciplined braggart, who also happened to be a superior pilot. During nine days in September 1918, Luke knocked down 15 balloons and 4 aircraft in less than thirty hours of flying time. On his last flight, he crash-landed behind enemy lines. Rather than surrender, an armed with only a Colt .45, he fought it out single-handedly against a squad of German infantry... until he was killed.

PFALZ D III
Single-seater scout (1917). The Pfaiz and the Albatros fighters were very similar in appearance and, in fact, were grouped together within the same squadrons. Some of the staffein that made up the Baron's Jagdgeschwader 1 were equipped with the Pfaiz D III.

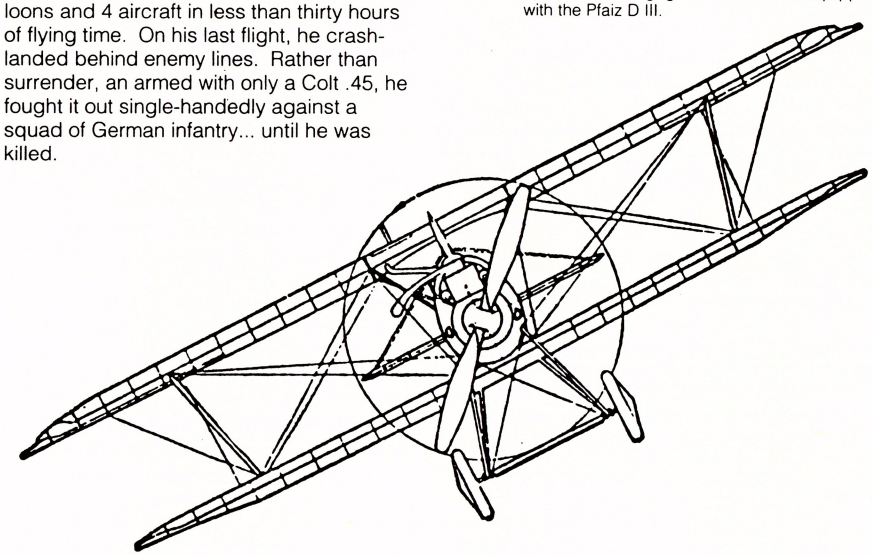

LIMITED WARRANTY

Congratulations on your purchase of a Cosmi Software Product. Cosmi Software warrants the media to be free from defects in material for 90 days. If during the first 90 days after purchase, a defect in media should occur, the software may be returned to Cosmi Software, who will replace the media at no charge. If, at any time, after the initial 90 day period, your media becomes defective, the media may be returned to Cosmi Software for replacement at a $5.00 service charge.

In no case will Cosmi Software be held liable for direct, indirect, or incidental damages resulting from any defect or omission in the manual or other related items and processes, including, but not limited to service, loss of business, anticipated profit, or other consequential damages.